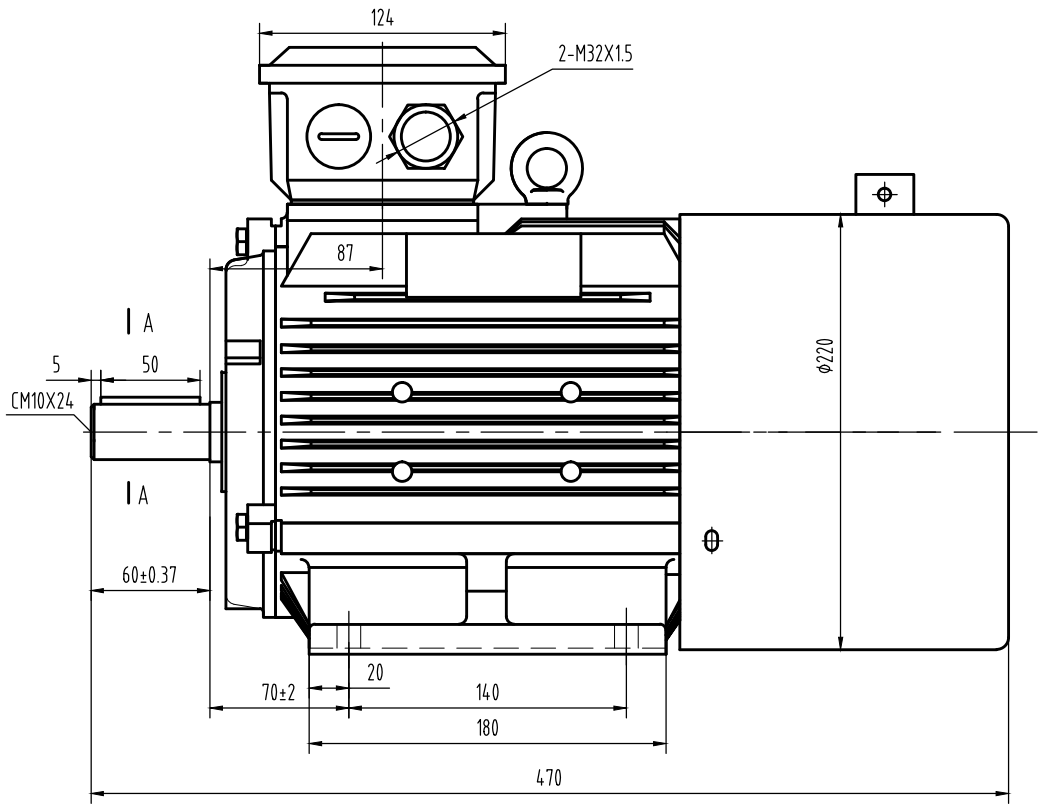

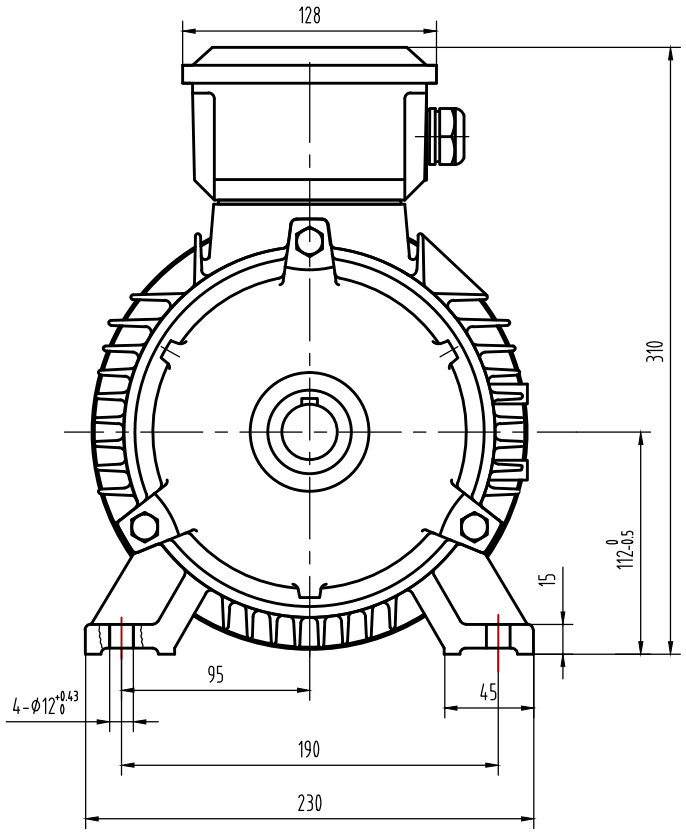

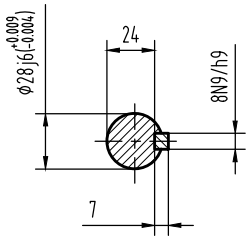

Mark	No.	Zone	File changing No.	Signature	Date				OUTLINE
Design			Standard			Sign	Weight	Scale	OMV0-112M0-04~08P B3
Check								1:2.5	
Auditing									Wuxi OMEC LTD.
Technics			Approval			Total page	page No.		